pure ultra®

# USER MANUAL

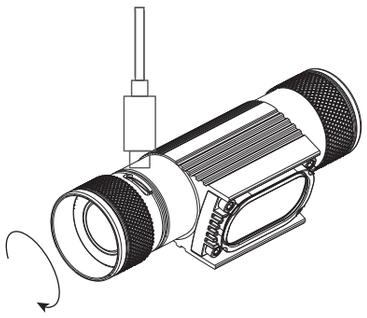

# HR9

## Headlamp with auxiliary Red light

Thank you for being a part of our PureUltra family. Please read this manual carefully before use and keep it for future reference!

## Guarantee/Warranty

Headlamp within **3 years** of purchase, battery within **1 year** of purchase, accessories within **30 days** of purchase. Pls email PureUltra directly via global customer support email address: **support@pureultras.com** for repair or replacement, or pls contact the point of sale from which the product was purchased within 30 days.
The seller reserves the right to subsequent performance before refunding the purchase price. Necessary transport costs will be reimbursed to the customer if a justified claim of the legal warranty is established. The exercise of the statutory rights in respect of defects shall be free of charge to repair or replacement.


**Warranty is provided by manufacturer:**
ShenZhen PureUltra Technology Co., LTD.
PureUltra, Building 1, No. 43 Cuijing Road,
Pingshan Dist., Shenzhen, China 518122
www.pureultras.com
Email: support@pureultras.com


Made in China

PureUltra hereby declares that this product ( HR9 headlamp ) in conformity with the essential requirements of the applicable European Directives. EU-Declaration of Conformity can be found here: www.pureultras.com

6 976366 490059
**Item number: HR9**

www.pureultras.com

## PureUltra HR9

**PureUltra HR9** is a high performance lightweight headlamp equipped with two auxiliary red lights for various lighting demands, 155 degrees large floodlighting designed reflector houses five built-in LEDs give the HR9 a max output of 900 lumens and a max throw of 125 meters. Hidden USB Type-C charging port for go-anywhere charging.

## What's in the box

HR9*1, PureUltra 18650 Battery*1, USB Type-C Charging Cable*1, Headband*1, Top Strap*1, Bracket*1, Spare O-rings*1, User Manual*1, Gift Box*1.

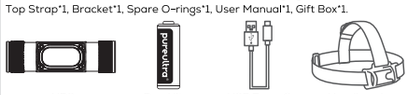

HR9 | PureUltra 18650 Battery | USB Type-C Charging Cable | Headband, Top Strap, Bracket

## Specifications

**MODE - BRIGHTNESS LEVEL - OUTPUT RATIO - RUNTIME**

| | | |
|---|---|---|
| **TURBO** | 900 - 630 - 180 Lumens | 100% 10min, 70% 4hours, 20% 20min |
| **HIGH** | 600 - 150 Lumens | 100% 340min, 25% 30min |
| **MEDIUM** | 250 Lumens | 100% 8hours |
| **LOW** | 22 Lumens | 100% 72hours |
| **MOON** | 5 Lumens | 100% 300hours |
| **WHITE FLASH** | 900 Lumens | 100% 3hours |
| **RED HIGH** | 125 Lumens | 100% 12hours |
| **RED LOW** | 7 Lumens | 100% 200hours |
| **RED FLASH** | 125 Lumens | 100% 8hours |
| **ALTERNATING FLASHING of RED + WHITE** | RED ( 125 Lumens ) + WHITE ( 900 Lumens ) | 100% 3hours |

| ANSI/PLATO FL 1-2019 STD | WHITE | | | | | WHITE FLASH |
|---|---|---|---|---|---|---|
| | TURBO | HIGH | MEDIUM | LOW | MOON | |
| | 900-630 Lumens | 600-150 Lumens | 250 Lumens | 22 Lumens | 5 Lumens | 900 Lumens |
| | 4h30min | 6h10min | 8h | 72h | 300h | 3h |
| | 125m | 105m | 70m | 22m | 7m | 125m |
| | 3,907cd | 2,757cd | 1,225cd | 121cd | 12cd | 3,907cd |

| ANSI/PLATO FL 1-2019 STD | RED | | | ALTERNATING FLASHING of RED + WHITE |
|---|---|---|---|---|
| | RED HIGH | RED LOW | RED FLASH | |
| | 125 Lumens | 7 Lumens | 125 Lumens | RED 125 Lumens + WHITE 900 Lumens |
| | 12h | 200h | 8h | 3h |
| | / | / | / | / |
| | / | / | / | / |
| | 1.0m ( Impact Resistance ) | | | |
| | IP66 dust-proof and waterproof | | | |
| | Dimensions: 87mm × 31.5mm × 24.5mm (3.42" × 1.24" × 0.96") | | | |
| | 97g (3.42oz) (Battery included, Headband / Bracket excluded) | | | |

**Note:** All performance measurements in accordance with ANSI/PLATO FL 1-2019 standard by using the new fresh PureUltra 18650 4000mAh Li-ion battery with a high discharge current 10A under laboratory conditions.

## Features

- Five built-in LEDs deliver a max output of 900 lumens and a max throw of 125m.
- The main advantage of the HR9 is that it has two auxiliary Red lights preserve night vision, without attracting insects, the red light helps to preserve your night vision so that it is good for nature watching, outdoor camping.
- The working modes of Red / Red Flashing / Alternating Flashing of Red + White are right for danger warning, emergency preparedness.
- 155 degrees large flood light designed reflector for close-up illumination which produces a broad vision, wide range, smooth & balanced light.
- Elastic and reflective headband remains visible at night for safe activities, the headband equipped with a removable TOP STRAP which provides an excellent stability in dynamic and intense activities.
- The included bracket (headlamp holder) provides 180° up and down adjustable tilt angle for different illumination needs ensure all-round lighting, more adapted to the needs of outdoor workers and enthusiasts. The arc side of bracket well-fit for the forehead, comfortable to wear.
- Comes with an optional 18650 4000mAh Li-ion battery specially designed for long runtime which could reach up to 300 hours at the 5-lumen moon output.
- Hidden USB Type-C charging port with waterproof design.
- With power indicator indicates remaining battery power.
- Side switch, one key control, easy operate.
- Lens with double-sided anti-reflection coating for clearly lighting.
- Impact resistant to 1.0 meter. Rating in accordance with IP66.
- Dimensions: 87mm × 31.5mm × 24.5mm ( 3.42" × 1.24" × 0.96" ).
- Net Weight: 97g ( 3.42oz ) ( Battery included, Headband / Bracket excluded ).

## Product Overview

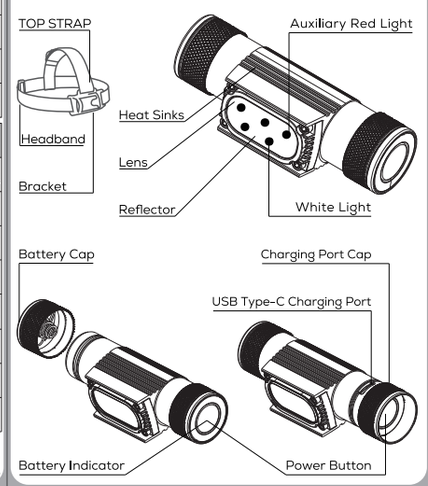


## Before First Use

- As illustrated, before first use, please unscrew the battery cap and remove the insulating film within the battery compartment.

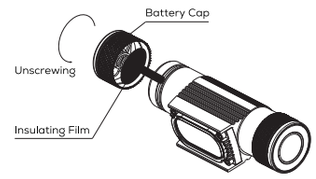


- Before first use, please fully charge the product.

## Charging

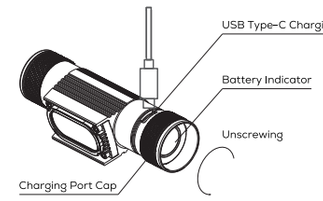


- The HR9 is equipped with an intelligent charging system and built-in a hidden USB Type-C charging port. As illustrated, firstly tighten the Battery Cap after inserting the battery, secondly unscrew the Charging Port Cap until the charging port is fully exposed, and then use the USB cable to connect an external power supply ( e.g. a USB adapter or other USB charging devices such as your mobile phone charger, power bank, or computer ) to the charging port to begin the charging process.
- Battery Indicator:
  Red means charging, Green means charging completed ( battery level>95% ). Green flashing means that the battery hasn't been inserted or the Battery Cap hasn't been tightened tightly.

**Note:** Better charging efficiency with a USB power source of no less than 10W ( 5V 2A ). The charging time will be longer than 4 hours when the USB power supply is insufficient to provide 5V 2A power capacity.

| Charging Parameter | Specification |
|---|---|
| **Charging Cable** | USB Type-C charging cable, length: 0.3m |
| **Input** | 5V 2A, Max. 9V 2A |
| **Max. Charging Current** | 2A |
| **Voltage of Fully Charged Battery Pack** | 4.20V±0.03V |
| **Charge Indication** | Red: charging<br>Green: charging completed ( over 95% )<br>Green Flashing: battery isn't inserted or the Battery Cap isn't tightened tightly |
| **Time to Fully Charged** | 4h when the USB power supply is 5V 2A<br>3h when the USB power supply is 9V 2A |

## Supported Battery

| DESCRIPTION | TYPE | VOL-TAGE | COMPATIBILITY |
|---|---|---|---|
| PureUltra Nipple Top 18650 Rechargeable Li-ion Battery with PCB | 18650 | 3.7V | √ Yes, recommended |
| Other Brands' Nipple Top 18650 Rechargeable Li-ion Battery with PCB | 18650 | 3.7V | √ Yes, compatible |
| Flat Top 18650 Rechargeable Li-ion Battery **without PCB** | 18650 | 3.7V | × No, forbidden |
| 21700 Rechargeable Li-ion Battery | 21700 | 3.7V | × No, incompatible |
| CR123A Non-rechargeable Primary Battery | CR123A | 3.0V | × No, incompatible |
| RCR123A ( 16340 ) Rechargeable Li-ion Battery | RCR123A | 3.7V | × No, incompatible |

- For better performance and safer to use with greater durability, it is highly recommended to use PureUltra up-to-date 18650 4000mAh real capacity Li-ion rechargeable battery with Protection Circuit Built-in discharge current 10A.

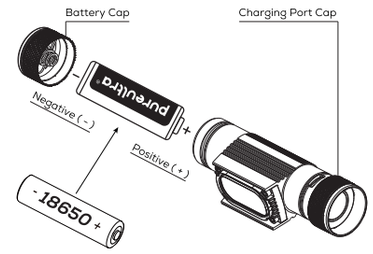


**Battery Installation**: As illustrated, insert the battery and screw to tighten the Battery Cap. Ensure the battery is inserted with the Positive ( + ) end pointing to the Charging Port Cap, the Negative ( − ) end towards the spring on the Battery Cap. The product will not work if the battery is incorrectly inserted.

## Battery Indicator

When turning on the HR9 headlamp, the battery indicator lights up and then automatically goes out after 5 seconds. Indicator displays the current battery power level, the corresponding relationship is as follows:

| Indicator Status | Remaining Battery Power | Recommend Operation |
|---|---|---|
| Green | Very Adequate ( 60%-100% ) | Safe To Use |
| Yellow | Comparatively Adequate ( 30%-60% ) | Normal Use |
| Red | Less ( 10%-30% ) | Pay Attention To Remaining Battery Power |
| Blink Thrice ( Flashing Red ) | Running Out Soon ( 1%-10% ) | Please Charge |

**Low Battery Warning**:
The battery indicator light will blink thrice ( flashing red ) when the remaining battery power is lower than 10% in the power-on state, reminding you that you should charge it in good time to avoid shortening or damaging the battery life.

**CAUTION :**
DO NOT cover the headlamp or place the headlamp's lens on the ground or put it close to other flammable objects when turned on to avoid accidents. Otherwise, the radiation energy of the headlamp may cause damage to the lens itself, or even result in burning to flammable objects.

**DANGER :**
DO NOT throw the light directly into the human eyes. This may cause temporary blindness, or permanent damage to the eyes.

DO NOT disassemble the sealing parts of the headlamp. Otherwise, the warranty will be voidable and the headlamp may be damaged.

DO NOT use poor-quality battery or non-protected battery. Otherwise, battery may leak or explode and damage the headlamp. It is highly recommended to use PureUltra 18650 4000mAh real capacity Li-ion rechargeable battery with PCB.

**WARNING :**
Li-ion battery should be charged in good time before it is exhausted, or it can be easily damaged when working at low remaining battery power level.

If the headlamp is about to be carried or transported in a pocket or bag, please unscrew the battery cap for half a circle to cut off the circuit to avoid activating the headlamp accidentally ( To prevent false triggering ).

If the headlamp is not used for a long time, pls take the battery out and keep it in a dry and safe place. Don't mix battery with conductive metal.

If the O-ring of the headlamp is damaged after long-term use, please replace O-ring in time to maintain the waterproof performance of the headlamp.

**NOTICE :**
Active thermal management through the built-in intelligent temperature control system: when the HR9 works in TURBO brightness output level for a long time and reaches the default temperature limit (the hot surface can reach 50°C), the output would gradually reduce to prevent overheating and ensure safety.

It is not recommended to use TURBO brightness level continuously. When the remaining battery power is low, the internal MCU automatically blocks TURBO brightness level and start to dim, this is normal. We suggest you to charge the PureUltra 18650 4000mAh battery after every use to keep it ready to use.

**EXCLUSION CLAUSE :**
The product has been thoroughly checked for quality and functionality before dispatch, and the customer undertakes to read the user manual instructions carefully before making a claim under the guarantee / warranty in order to rule out any operating errors. PureUltra is not liable for the following cases:

- in the event of cover the headlamp's lens when the headlamp is power-on
- in the event of use poor-quality batteries or non-protected batteries
- in the event of changes to the product or disassemble the sealing parts
- in the event of defects caused by improper maintenance and / or repair
- in the event of use other than for the intended purpose. INTENDED USE: This device ( HR9 headlamp ) is intended to be used as a headlamp. Any other use shall be deemed inappropriate.

**DISCLAIMER :**
PureUltra shall not be liable for damages caused by falling accidents, or injuries sustained resulting from the usage of the HR9 inconsistent with the **CAUTION / DANGER / WARNING / NOTICE** in the user manual, including but not limited to using the HR9 inconsistent with the **EXCLUSION CLAUSE** as described above.

# CONTENTS


( EN ) English _ _ _ _ _ _ 01
( DE ) Deutsch _ _ _ _ _ _ 01
( FI ) Suomi _ _ _ _ _ _ _ 02
( HU ) Magyar _ _ _ _ _ _ 02
( ES ) Español _ _ _ _ _ _ 02
( FR ) Français _ _ _ _ _ _ 03
( PT ) Português _ _ _ _ _ 03
( AR ) الْعَرَبِيَّة _ _ _ _ _ _ 03
( NL ) Nederlands _ _ _ _ _ 04
( SV-SE ) Svenska _ _ _ _ 04
( NO ) Norsk _ _ _ _ _ _ _ 04
( PL ) Polski _ _ _ _ _ _ _ 05
( RO ) Română _ _ _ _ _ _ 05
( CS-CZ ) Česky _ _ _ _ _ 05
( DA-DK ) Dansk _ _ _ _ _ 06
( IT ) Italiano _ _ _ _ _ _ 06
( JA-JP ) 日本語 _ _ _ _ _ 06


### ( EN ) English

**HOW TO OPERATE**

**ON/OFF:** single click the power button to turn on the headlamp, single click the power button to turn off the headlamp if there is no operation within 3 seconds in the power-on state. Press and hold the power button for 1 second in any brightness levels or working modes to turn off the headlamp.

**CHANGE BRIGHTNESS LEVEL:** after turning on the headlamp, single click the power button to cycle through the brightness levels sequence as follows: Medium -> High -> Low -> Red High -> Red Low -> Turn off -> Medium.

**MOON ACTIVATION:** in the power-off state, press and hold the power button for 1 second to access the MOON brightness level.

**TURBO ACTIVATION:** in the power-off state or in any brightness levels of white light state, double click the power button to access the TURBO brightness level.

**CHANGE AUXILIARY WORKING MODES:** in TURBO brightness level state, double click the power button to cycle through the auxiliary working modes sequence as follows: White flash -> Red Flash -> Alternating Flashing of Red + White -> TURBO -> White flash.

### ( DE ) Deutsch

**BEDIENUNGSANLEITUNG**

**EIN/AUS:** klicken Sie einmal auf die Einschalttaste, um die Stirnlampe einzuschalten. Klicken Sie einmal auf die Einschalttaste, um die Stirnlampe auszuschalten, wenn im eingeschalteten Zustand innerhalb von 3 Sekunden keine Bedienung erfolgt. Halten Sie die Einschalttaste in allen Helligkeitsstufen oder Betriebsmodi 1 Sekunde lang gedrückt, um die Stirnlampe auszuschalten.

**HELLIGKEITSSTUFE ZU ÄNDERN:** klicken Sie nach dem Einschalten der Stirnlampe einmal auf die Einschalttaste, um die Helligkeitsstufen wie folgt zu durchlaufen: Mittel -> Hoch -> Niedrig -> Rot hoch -> Rot niedrig -> Ausschalten -> Mittel.

**Helligkeitsstufenaktivierung Mondlicht:** halten Sie im ausgeschalteten Zustand die Einschalttaste 1 Sekunde lang gedrückt, um die Helligkeitsstufe Mondlicht aufzurufen.

**Helligkeitsstufenaktivierung Turbo:** klicken Sie im ausgeschalteten Zustand oder in allen Helligkeitsstufen des Weißlichtzustands doppelt auf die Einschalttaste, um die Helligkeitsstufe Turbo aufzurufen.

**Hilfsarbeitsmodi ändern:** doppelklicken Sie im Turbohelligkeitszustand auf die Einschalttaste, um die Hilfsarbeitsmodi wie folgt zu durchlaufen: Weißes Blinken -> Rotes Blinken -> Abwechselndes Blinken Von Weiß + Rot -> Turbo -> Weißes Blinken.



### ( FI ) Suomi

**MITEN KÄYTETÄÄN**

**ON/OFF:** yhdellä napsautuksella kytket ajovalon päälle virtapainiketta, yhdellä napsautuksella virtapainiketta sammuttaaksesi ajovalon, jos mitään toimintoa ei tehdä 3 sekunnin kuluessa virran ollessa päällä. Sammuta ajovalo painamalla virtapainiketta 1 sekunnin ajan kaikilla kirkkaustasoilla tai työtiloilla.

**Muuta Kirkkaustasoja:** kun olet sytyttänyt ajovalon, napsauta virtapainiketta yhdellä napsautuksella selataksesi kirkkaustasoja seuraavasti: Keskitaso -> Korkea -> Matala -> Punainen Korkea -> Punainen Matala -> Sammuta -> Keskitaso.

**Kuunvalon Kirkkaustason Aktivointi:** kun virta on katkaistu, paina virtapainiketta ja pidä se painettuna 1 sekunnin ajan päästäksesi kuunvalon kirkkaustasoon.

**Turbon Kirkkaustason Aktivointi:** virran ollessa pois päältä tai missä tahansa valkoisen valon kirkkaustasossa kaksoisnapsauta virtapainiketta päästäksesi turbon kirkkaustasoon.

**Muuta Lisätyötiloja:** turbon kirkkaustason tilassa kaksoisnapsauta virtapainiketta selataksesi aputyötilojen sarjaa seuraavasti: Vilkkuu Valkoinen -> Vilkkuu Punainen -> Vilkkuu Valkoinen + Punainen -> Turbo -> Vilkkuu Valkoinen.

### ( HU ) Magyar

**HASZNÁLATI ÚTMUTATÓ**

**Be/kikapcsolás:** egyszeri kattintással kapcsolja be a bekapcsológombot a fényszóró bekapcsolásához, egyszeri kattintással a bekapcsológombra a fényszóró kikapcsolásához, ha bekapcsolt állapotban 3 másodpercen belül nem történik művelet. Nyomja meg és tartsa lenyomva a bekapcsológombot 1 másodpercig bármilyen fényerőszinten vagy üzemmódban a fényszóró kikapcsolásához.

**Fényerő Szint Választás:** a fényszóró bekapcsolása után egyetlen kattintással a bekapcsológombra válthat a fényerőszintek sorrendjében az alábbiak szerint: Közepes -> Magas -> Alacsony -> Piros magas -> Piros alacsony -> Kikapcsolva -> Közepes.

**Holdfény-fényerőszint Aktiválása:** kikapcsolt állapotban nyomja meg és tartsa lenyomva a bekapcsológombot 1 másodpercig a holdfény fényerejének eléréséhez.

**Turbó Fényerőszint Aktiválása:** kikapcsolt állapotban vagy a fehér fény bármely fényerősségénél kattintson duplán a bekapcsológombra a turbó fényerőszint eléréséhez.

**Kiegészítő üzemmódok Módosítása:** turbó fényerősség állapotában kattintson duplán a bekapcsológombra a kiegészítő üzemmódok közötti váltáshoz az alábbiak szerint: Fehér Villogás -> Piros Villogás -> Váltakozó Fehér + Piros Villogás -> Turbó -> Fehér Villogás.

### ( ES ) Español

**COMO OPERAR**

**ENCENDIDO/APAGADO:** haga clic una vez en el botón de encendido para encender el faro, haga clic una vez en el botón de encendido para apagar el faro si no se realiza ninguna operación dentro de los 3 segundos en el estado de encendido. Mantenga presionado el botón de encendido durante 1 segundo en cualquier nivel de brillo o modo de trabajo para apagar el faro.

**Cambiar el Nivel de Brillo:** después de encender el faro, haga clic una vez en el botón de encendido para recorrer la secuencia de niveles de brillo de la siguiente manera: Medio -> Alto -> Bajo -> Rojo Alto -> Rojo Bajo -> Apagar -> Medio.

**Activación Del Nivel de Brillo de La Luz de La Luna:** en el estado apagado, presione y mantenga presionado el botón de encendido durante 1 segundo para acceder al nivel de brillo de la luz de la luna.

**Activación Del Nivel de Brillo Turbo:** en el estado de apagado o en cualquier nivel de brillo del estado de luz blanca, haga doble clic en el botón de encendido para acceder al nivel de brillo turbo.

**Cambie Los Modos de Trabajo Auxiliares:** en el estado de nivel de brillo turbo, haga doble clic en el botón de encendido para recorrer la secuencia de modos de trabajo auxiliares de la siguiente manera: Parpadeo Blanco -> Parpadeo Rojo -> Parpadeo Alterno de Blanco + Rojo -> Turbo -> Parpadeo Blanco.



### ( FR ) Français

**COMMENT OPÉRER**

**Marche/Arrêt:** cliquez une fois sur le bouton d'alimentation pour allumer la lampe frontale, cliquez une fois sur le bouton d'alimentation pour éteindre la lampe frontale s'il n'y a aucune opération dans les 3 secondes à la mise sous tension. Appuyez et maintenez enfoncé le bouton d'alimentation pendant 1 seconde dans n'importe quel niveau de luminosité ou mode de fonctionnement pour éteindre la lampe frontale.

**Changer le Niveau de Luminosité:** après avoir allumé la lampe frontale, cliquez une fois sur le bouton d'alimentation pour parcourir la séquence des niveaux de luminosité comme suit : Moyen -> élevé -> Faible -> Rouge élevé -> Rouge Faible -> éteindre -> Moyen.

**Activation du Niveau de Luminosité au Clair de Lune:** à l'état de mise hors tension, appuyez et maintenez enfoncé le bouton d'alimentation pendant 1 seconde pour accéder au niveau de luminosité au clair de lune.

**Activation du Niveau De Luminosité Turbo:** à l'état de mise hors tension ou dans n'importe quel niveau de luminosité de l'état de lumière blanche, double-cliquez sur le bouton d'alimentation pour accéder au niveau de luminosité turbo.

**Changer Les Modes de Fonctionnement Auxiliaires:** en état de niveau de luminosité turbo, double-cliquez sur le bouton d'alimentation pour parcourir la séquence des modes de fonctionnement auxiliaires comme suit: Clignotement Blanc -> Clignotement Rouge -> Clignotement Alternatif de Blanc + Rouge -> Turbo -> Clignotement Blanc.

### ( PT ) Português

**COMO OPERAR**

**LIGAR/DESLIGAR:** clique uma vez no botão liga/desliga para ligar o farol, clique uma vez no botão liga/desliga para desligar o farol se não houver operação dentro de 3 segundos no estado ligado. Pressione e segure o botão liga / desliga por 1 segundo em qualquer nível de brilho ou modo de trabalho para desligar o farol.

**Mude o Nível de Brilho:** depois de ligar o farol, clique uma vez no botão liga / desliga para percorrer a sequência de níveis de brilho da seguinte forma : Médio -> Alto -> Baixo -> Vermelho Alto -> Vermelho Baixo -> Desligar -> Médio.

**Ativação do Nível de Brilho do Luar:** no estado desligado, pressione e segure o botão liga / desliga por 1 segundo para acessar o nível de brilho do luar.

**Ativação do Nível de Brilho Turbo:** no estado desligado ou em qualquer nível de brilho do estado de luz branca, clique duas vezes no botão liga / desliga para acessar o nível de brilho turbo.

**Alterar os Modos de Trabalho Auxiliares:** no estado do nível de brilho turbo, clique duas vezes no botão liga / desliga para percorrer a sequência dos modos de trabalho auxiliares da seguinte forma : Branco Piscando -> Vermelho Piscando -> Piscando Alternadamente de Branco + Vermelho -> Turbo -> Branco Piscando.

### ( AR ) الْعَرَبِيَّة

**طريقة التشغيل**

**التشغيل/الإيقاف:** انقر مرة واحدة على زر الطاقة لتشغيل المصباح الأمامي، وانقر مرة واحدة على زر الطاقة لإيقاف تشغيل المصباح الأمامي إذا لم يكن هناك تشغيل خلال 3 ثوانٍ في حالة التشغيل. واضغط مع الاستمرار على زر الطاقة لمدة ثانية واحدة في أي مستويات سطوع أو أوضاع عمل لإيقاف تشغيل المصباح الأمامي.

**تغيير مستوى السطوع:** بعد تشغيل المصباح الأمامي، انقر مرة واحدة على زر الطاقة للتنقل عبر تسلسل مستويات السطوع كما يلي: متوسط -> منخفض -> منخفض -> أحمر مرتفع -> أحمر منخفض -> إيقاف -> متوسط.

**تفعيل مستوى سطوع ضوء القمر:** في حالة إيقاف التشغيل، واضغط مع الاستمرار على زر الطاقة لمدة ثانية واحدة للوصول إلى مستوى سطوع ضوء القمر.

**تنشيط مستوى سطوع التربو:** في حالة إيقاف التشغيل أو في أي مستويات سطوع للحالة الضوء الأبيض، انقر نقرًا مزدوجًا على زر الطاقة للوصول إلى مستوى سطوع التربو.

**تغيير أوضاع العمل المساعدة:** في حالة مستوى سطوع التربو، انقر نقرًا مزدوجًا فوق زر الطاقة للتنقل عبر تسلسل أوضاع العمل المساعدة كما يلي: وميض أبيض -> وميض أحمر -> وميض متناوب باللون الأبيض + الأحمر -> تورو -> وميض أبيض.



### ( NL ) Nederlands

**HOE TE BEDIENEN**

**AAN/UIT:** klik één keer op de aan / uit-knop om de koplamp in te schakelen, klik één keer op de aan/uit-knop om de koplamp uit te schakelen als er binnen 3 seconden geen bediening plaatsvindt terwijl de lamp is ingeschakeld. Houd de aan / uit-knop in een willekeurig helderheidsniveau of in een werkmodus 1 seconde ingedrukt om de koplamp uit te schakelen.

**HELDERHEIDSNIVEAU WIJZIGEN:** na het inschakelen van de koplamp klikt u één keer op de aan/uit-knop om als volgt door de reeks helderheidsniveaus te bladeren: Medium -> Hoog -> Laag -> Rood Hoog -> Rood Laag -> Uitschakelen -> Medium.

**Activering Van Het Helderheidsniveau Van Het Maanlicht:** houd in de uitgeschakelde toestand de aan/uit-knop 1 seconde ingedrukt om toegang te krijgen tot het helderheidsniveau van het maanlicht.

**Activering Van Het Turbohelderheidsniveau:** dubbelklik in de uitgeschakelde toestand of in een helderheidsniveau van wit licht op de aan / uit-knop om toegang te krijgen tot het turbohelderheidsniveau.

**Hulpwerkmodi Wijzigen:** in de status van het turbohelderheidsniveau dubbelklikt u op de aan/uit-knop om als volgt door de volgorde van de hulpwerkmodi te bladeren: Wit Knipperen -> Rood Knipperen -> Afwisselend Knipperen Van Wit + Rood -> Turbo -> Wit Knipperen.

### ( SV-SE ) Svenska

**HUR MAN FUNGERAR**

**PÅ/AV:** enkelklicka på strömknappen för att tända strålkastaren, enkelklicka på strömbrytaren för att släcka strålkastaren om ingen åtgärd görs inom 3 sekunder i strömtillståndet. Tryck och håll in strömknappen i 1 sekund i valfri ljusstyrka eller arbetsläge för att stänga av strålkastaren.

**Ändra Ljusstyrka:** efter att ha slagit på strålkastaren, enkelklicka på strömbrytaren för att bläddra genom ljusstyrkenivåerna enligt följande : Medium -> Hög -> Låg -> Röd Hög -> Röd Låg -> Stäng Av -> Medium.

**Aktivering Av Månskenets Ljusstyrka:** i avstängt läge, tryck och håll in strömknappen i 1 sekund för att komma åt månskenets ljusstyrka.

**Aktivering Av Turboljusstyrka:** i avstängt läge eller i valfri ljusstyrka för vitt ljus dubbelklickar du på strömknappen för att komma åt turboljusstyrkan.

**ändra Extra Arbetslägen:** i turboljusstyrka, dubbelklicka på strömknappen för att bläddra igenom sekvensen för extra arbetslägen enligt följande: Vit Blinkning -> Röd Blinkning -> Växlande Blinkning Av Vit + Röd -> Turbo -> Vit Blinkning.

### ( NO ) Norsk

**HVORDAN BETJENES**

**PÅ/AV:** enkeltklikk på strømknappen for å slå på hodelykten, enkeltklikk på strømknappen for å slå av hodelykten hvis det ikke er noen operasjon innen 3 sekunder i slått på. Trykk og hold inne strømknappen i 1 sekund i alle lysstyrkenivåer eller arbeidsmoduser for å slå av hodelykten.

**Endre Lysstyrkenivå:** etter å ha slått på hodelykten, enkeltklikk på strømknappen for å bla gjennom lysstyrkenivåene som følger: Medium -> Høy -> Lav -> Rød Høy -> Rød Lav -> Slå Av -> Medium.

**Aktivering Av Lysstyrkenivå for Måneskinn:** i avslått tilstand, trykk og hold inne strømknappen i 1 sekund for å få tilgang til lysstyrkenivået for måneskinn.

**Aktivering Av Turbolysstyrkenivå:** i avslått tilstand eller i lysstyrkenivåer for hvitt lys, dobbeltklikk på strømknappen for å få tilgang til turbolysstyrkenivået.

**Endre Hjelpearbeidsmodus:** i turbolysstyrkenivå, dobbeltklikk på strømknappen for å gå gjennom sekvensen for hjelpearbeidsmodus som følger: Hvit Blinking -> Rød Blinking -> Vekslende Blinking Av Hvit + Rød -> Turbo -> Hvit Blinking.



### ( PL ) Polski

**JAK DZIAŁAĆ**

**WŁĄCZ/WYŁĄCZ:** pojedyncze kliknięcie przycisku zasilania powoduje włączenie reflektora, pojedyncze kliknięcie przycisku zasilania powoduje wyłączenie reflektora, jeśli w stanie włączonym nie zostanie wykonana żadna operacja w ciągu 3 sekund. Naciśnij i przytrzymaj przycisk zasilania przez 1 sekundę w dowolnym poziomie jasności lub trybie pracy, aby wyłączyć latarkę.

**ZMIEŃ POZIOM JASNOŚCI:** po włączeniu latarki kliknij raz przycisk zasilania, aby przełączać sekwencję poziomów jasności w następujący sposób: średni -> Wysoki -> Niski -> Czerwony Wysoki -> Czerwony Niski -> Wyłącz -> średni.

**Aktywacja Poziomu Jasności światła Księżyca:** w stanie wyłączenia naciśnij i przytrzymaj przycisk zasilania przez 1 sekundę, aby uzyskać dostęp do poziomu jasności światła księżyca.

**Aktywacja Poziomu Jasności Turbo:** w stanie wyłączenia lub przy dowolnym poziomie jasności w stanie białego światła kliknij dwukrotnie przycisk zasilania, aby uzyskać dostęp do poziomu jasności turbo.

**Zmień Pomocnicze Tryby Pracy:** w stanie poziomu jasności turbo kliknij dwukrotnie przycisk zasilania, aby przełączać sekwencję dodatkowych trybów pracy w następujący sposób : Białe Miganie -> Czerwone Miganie -> Naprzemienne Miganie Białego + Czerwonego -> Turbo -> Białe Miganie.

### ( RO ) Română

**INSTRUCȚIUNI DE UTILIZARE**

**Pornit/Oprit:** faceți un singur clic pe butonul de pornire pentru a aprinde farul, faceți un singur clic pe butonul de pornire pentru a stinge farul dacă nu există nicio operațiune în decurs de 3 secunde în starea de pornire. Apăsați și mențineți apăsat butonul de pornire timp de 1 secundă în orice nivel de luminozitate sau mod de lucru pentru a stinge farul.

**Schimbare Nivel Luminozitate:** după aprinderea farului, faceți un singur clic pe butonul de pornire pentru a parcurge secvența nivelurilor de luminozitate, după cum urmează: Mediu -> Ridicat -> Scăzut -> Roșu Ridicat -> Roșu Scăzut -> Stinge -> Mediu.

**Activarea Nivelului de Luminozitate la Lumina Lunii:** în starea de oprire, apăsați și mențineți apăsat butonul de pornire timp de 1 secundă pentru a accesa nivelul de luminozitate la lumina lunii.

**Activarea Nivelului de Luminozitate Turbo:** în starea de oprire sau în orice nivel de luminozitate al luminii albe, faceți dublu clic pe butonul de pornire pentru a accesa nivelul de luminozitate turbo.

**Schimbați Modurile de Lucru Auxiliare:** în starea nivelului de luminozitate turbo, faceți dublu clic pe butonul de pornire pentru a parcurge secvența modurilor de lucru auxiliare, după cum urmează: Intermitent Alb -> Intermitent Roșu -> Intermitent Alternant Alb + Roșu -> Turbo -> Intermitent Alb.

### ( CS-CZ ) Česky

**JAK PROVOZOVAT**

**ZAPNUTO / VYPNUTO :** jedním kliknutím na tlačítko napájení zapnete čelovku, jedním kliknutím na tlačítko napájení vypnete čelovku, pokud během 3 sekund v zapnutém stavu nepro běhne žádná operace. Chcete-li čelovku vypnout, stiskněte a podržte tlačítko napájení po dobu 1 sekundy v jakékoli úrovni jasu nebo pracovních režimech.

**Změna Úrovně Jasu:** po zapnutí čelovky jedním kliknutím na tlačítko napájení procházejte pořadí úrovní jasu takto: Střední -> Vysoký -> Nízký -> červený Vysoký -> červený Nízký -> Vypnout -> Střední.

**Aktivace Úrovně Jasu Měsíčního Svitu:** ve vypnutém stavu stiskněte a podržte tlačítko napájení po dobu 1 sekundy, abyste získali přístup k úrovni jasu měsíčního svitu.

**Aktivace Úrovně Jasu Turbo:** ve vypnutém stavu nebo v jakékoli úrovni jasu bílého světla poklepejte na tlačítko napájení pro přístup k úrovni jasu turbo.

**Změňte Pomocné Pracovní Režimy:** ve stavu úrovně jasu turbo, dvakrát klikněte na tlačítko napájení pro procházení sekvence pomocných pracovních režimů následovně: Bílé Blikání -> červené Blikání -> Střídavé Blikání Bílé + červené -> Turbo -> Bílé Blikání.



### ( DA-DK ) Dansk

**SÅDAN FUNGERER DU**

**Tænde/Slukke:** enkelt klik på tænd/sluk-knappen for at tænde forlygten, enkelt klik på tænd/sluk-knappen for at slukke for forlygten, hvis der ikke er nogen betjening inden for 3 sekunder i tændt tilstand. Tryk og hold tænd/sluk-knappen nede i 1 sekund i alle lysstyrkeniveauer eller arbejdstilstande for at slukke for forlygten.

**SKIFT LYSSTYRKE-NIVEAU:** efter at have tændt forlygten, skal du et enkelt klik på tænd/sluk-knappen for at gå gennem lysstyrke-sekvensen som følger: Medium -> Høj -> Lav -> Rød Høj -> Rød Lav -> Sluk -> Medium.

**Aktivering af Måneskinslysstyrkeniveau:** i slukket tilstand skal du trykke på tænd/sluk-knappen og holde den nede i 1 sekund for at få adgang til måneskinslysstyrkeniveauet.

**Aktivering af Turbolysstyrkeniveau:** i slukket tilstand eller i enhver lysstyrkeniveau for hvidt lys, dobbeltklik på tænd/sluk-knappen for at få adgang til turbolysstyrkeniveauet.

**Skift Hjælpearbejdstilstande:** i turbolysstyrketilstand skal du dobbeltklikke på tænd/sluk-knappen for at skifte gennem sekvensen for hjælpearbejdstilstande som følger: Hvid Blink -> Rød Blinkende -> Skiftende Blinkende Hvid + Rød -> Turbo -> Hvid Blink.

### ( IT ) Italiano

**COME OPERARE**

**Accendi/Spegni:** fare clic una volta sul pulsante di accensione per accendere la lampada frontale, fare clic una volta sul pulsante di accensione per spegnere la lampada frontale se non viene eseguita alcuna operazione entro 3 secondi nello stato di accensione. Tenere premuto il pulsante di accensione per uno secondo in qualsiasi livello di luminosità o modalità di funzionamento per spegnere la lampada frontale.

**Cambia Livello di Luminosità:** dopo aver acceso la lampada frontale, fare clic una volta sul pulsante di accensione per scorrere la sequenza dei livelli di luminosità come segue: Medio -> Alto -> Basso -> Rosso Alto -> Rosso Basso -> Spegni -> Medio.

**Attivazione Del Livello di Luminosità Al Chiaro di Luna:** nello stato di spegnimento, tenere premuto il pulsante di accensione per 1 secondo per accedere al livello di luminosità al chiaro di luna.

**Attivazione Del Livello di Luminosità Turbo:** nello stato di spegnimento o in qualsiasi livello di luminosità dello stato di luce bianca, fare doppio clic sul pulsante di accensione per accedere al livello di luminosità turbo.

**Modificare Le Modalità di Lavoro Ausiliarie:** nello stato del livello di luminosità turbo, fare doppio clic sul pulsante di accensione per scorrere la sequenza delle modalità